HCNF/HCNCU

Copper or copper-alloy conductor, jacket in cupronickel
MI CABLE
Mineral insulated heating cable

- High performance output
- Wide temperature range
- Fire resistant
- High mechanical resistance
- Flames and corrosion resistance

The abbreviation HCNF/HCNCU defines the wide range of cupronickel sheathed mineral insulated heating cables. They are specially used in all industrial processes, where the process temperature is very high, up to 400°C.
The cupronickel sheathed mineral insulated heating cables allow to solve problems of freeze of primary and instrumental lines, which execution temperatures should be very high, up to 400°C.
Moreover, they are the ideal solution for temperature maintenance in nuclear plants, bitumen industries, melting sodium, chemical and oil industries, power plants and in all those applications where a high temperature resistance is required along with a high power per meter.
They can be powered in both high and medium voltage up to 400V alternate power according to the cable type.
The HCNCU series presents low power resistance values essential for application on long pipes.

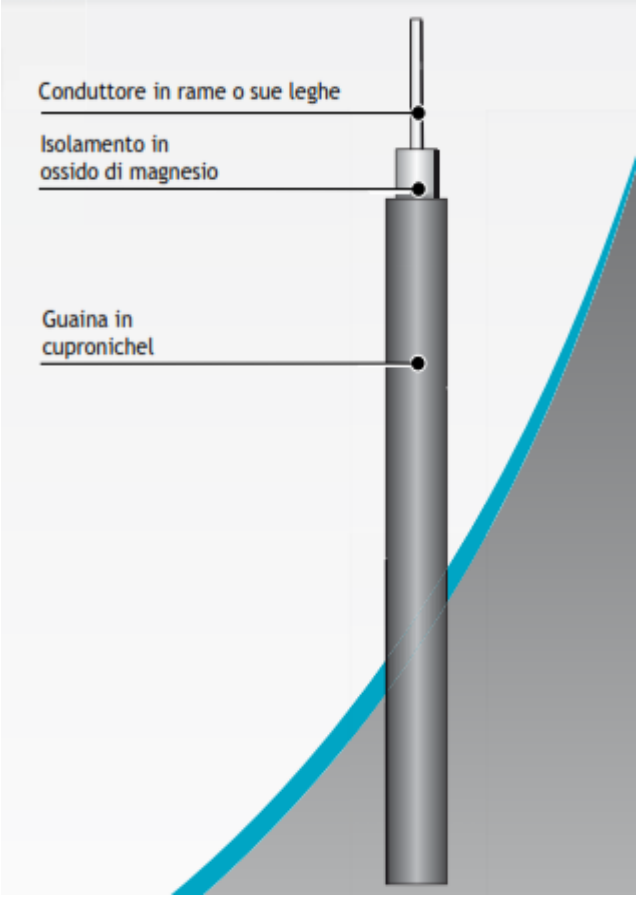

Features

Conductor material	Copper (HCNCU) or copper and nickel alloy (HCNF)
Isolating material	Magnesium oxide
Jacket material	Cupronickel 70/30
Power	Up to 500V, alternate power
Isolating resistance	1000MOhm/1000m; tested in factory
Isolating power	2.0KV rms ac
Max. jacket temperature	400°C
Min. installation temperature	-60°C
Min. bending radius	6 times the cable diameter
Min. laying pace	50mm
Approval	ATEX for use in areas 1 and 2

Specification

Cable type	Diameter of the cable mm	Conductor material	Diameter of the conductor mm	Resistance Ohm/meter	Length of the standard coil meter	Diameter of the standard coil	Weight in Kg for 1000 meters
HCNF1M1,6	3,2	Copper alloy	0,62	1,6	625	850	40
HCNF1M1	3,4	Copper alloy	0,47	1	550	850	45
HCNF1M0,630	3,7	Copper alloy	1	0,63	465	850	55
HCNF1M0,400	4	Copper alloy	1,25	0,4	400	850	67
HCNF1M0,25	4,4	Copper alloy	1,58	0,25	330	850	84
HCNF1M016	4,9	Copper alloy	1,97	0,16	265	850	108
HCNCU1M0,063	3,2	Copper	0,59	0,063	620	850	39
HCNCU1M0,04	3,4	Copper	0,74	0,04	550	850	44
HCNCU1M0,025	3,7	Copper	0,94	0,025	440	850	55
HCNCU1M0,017	4,6	Copper	1,14	0,017	300	850	84
HCNCU1M0,011	4,9	Copper	1,41	0,011	265	850	98
HCNCU1M0,007	5,3	Copper	1,77	0,007	225	850	120
HCNCU1M0,004	5,9	Copper	2,34	0,004	180	850	155

The values of the resistances in Ohm per meter of the heating cables are 20°C; the resistances in copper alloy vary a little with temperature changes and the coefficients of variations can be matched according to the following table:

Temperature coefficient	20°C	100°C	200°C	400°C	600°C
	1	1,019	1,035	1,063	1,066

The copper resistances change when the temperature changes according to the following formula:

$$r_T = r_{20°C} ((1 + 0,004 (T – 20))$$

In the dimensioning of heat trace circuits with mineral insulated heating cables it is important to determine, for each application, the maximum charge and therefore the temperature that the jacket reaches on execution.

The following directions are effective for application in safe areas; for applications in hazardous areas it is necessary to ask the producer, who will assemble also the heat trace circuits and will provide also all the necessary guarantees of ATEX conformity for the whole circuit and not only for each component.

a) from the dimensioning calculations it is possible to determine the power in watt per meter supplied by the heat trace circuit
b) select the correction factor of the heating cable and multiply it by the power in watt per meter
c) find the point on the graph where the corrected value intersects the maintain temperature. From the left hand (y) axis it is possible to read the temperature of the jacket, which must always be lower than the maximum temperature of the heating cable, equal to 400°C.

Cable type	Correction factor
HCNF1M1,6	1
HCNF1M1	0,948
HCNF1M0,630	0,88
HCNF1M0,400	0,822
HCNF1M0,25	0,756
HCNF1M016	0,688
HCNCU1M0,063	1
HCNCU1M0,04	0,948
HCNCU1M0,025	0,88
HCNCU1M0,017	0,727
HCNCU1M0,011	0,688
HCNCU1M0,007	0,644
HCNCU1M0,004	0,59

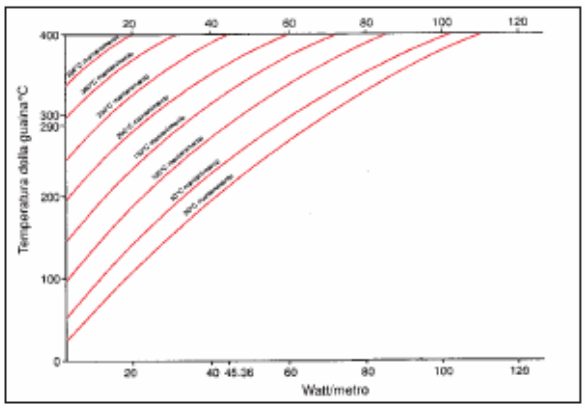

Via Dell'Olmo 66
20853 Biassono (MB)
Italy
Temar s.r.l.
www.temarsrl.it
Tel: +39-039-2494256
Fax: +39-039-2495161
email: info@temarsrl.it